ARISTON

SPARE PARTS EXPLODED VIEW
STORAGE ELECTRIC WATER HEATERS

Model

BLU ECO V 1,5K

R8216445-05 - 11/01/2017

EN	FR	IT	ES	DE	NL

BLU ECO V 1,5K

Storage Electric Water Heaters

Col	Reference	Model type	Begin	End
1	3200467	BLU ECO 50 V 1,5K	09-2009	10-2015
2	3200748	BLU ECO EVO 50 V 1,5K EU	06-2015	-
3	3200468	BLU ECO 80 V 1,5K	09-2009	10-2015
4	3200759	BLU ECO EVO 80 V 1,5K EU	06-2015	-
5	3200469	BLU ECO 100 V 1,5K	09-2009	10-2015
6	3200770	BLU ECO EVO 100 V 1,5K EU	06-2015	-

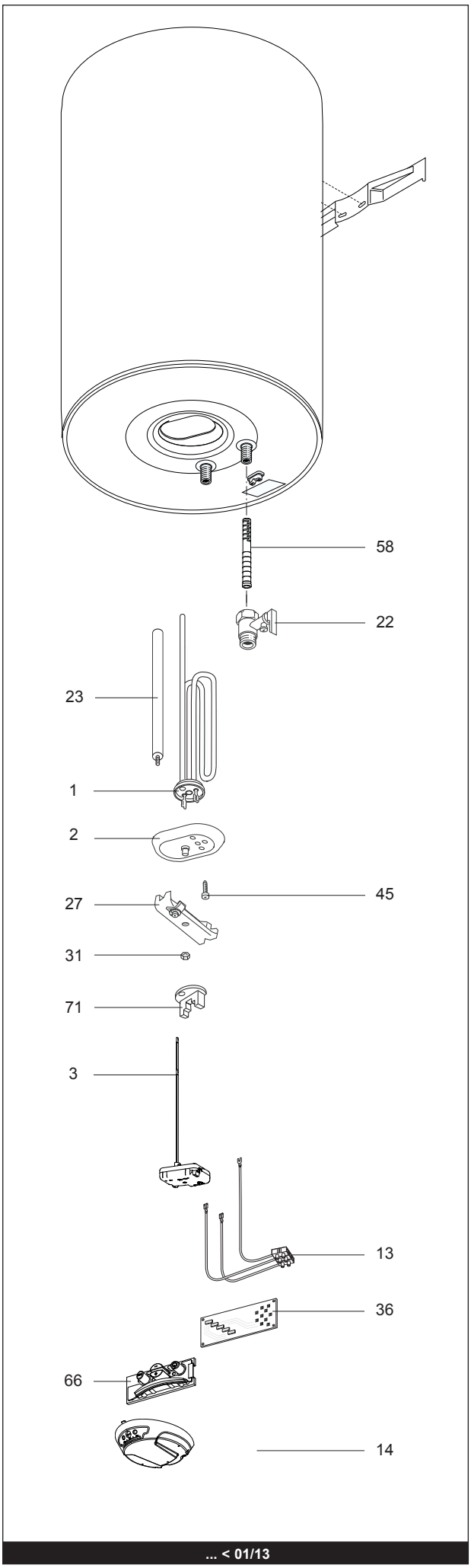
58
22
23
1
2
27
45
31
71
3
13
36
66
14
... < 01/13

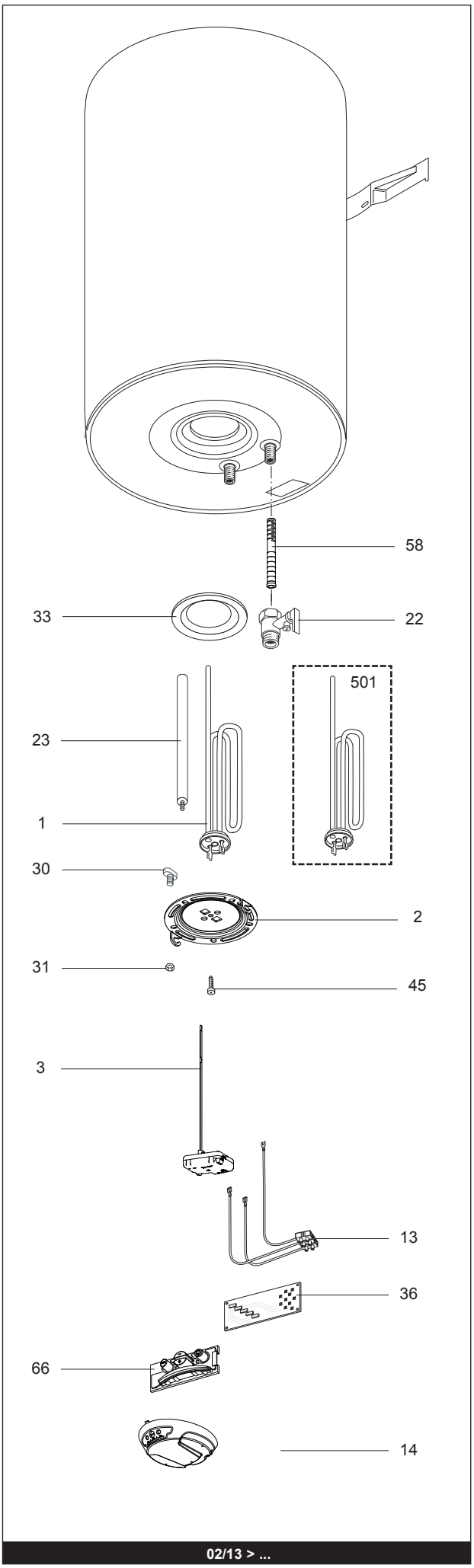
58
33
22
501
23
1
30
2
31
45
3
13
36
66
14
02/13 > ...

	Description	Manf. Pt. N	Type	1 50 V 1,5K	2 EVO 50 V 1,5K EU	3 80 V 1,5K	4 EVO 80 V 1,5K EU	5 100 V 1,5K	6 EVO 100 V 1,5K EU	7	8	9	10	11	12	13	14	15	16	17	18	From	to
0001	HEATING ELEMENT 1500W 220-240V	65111790			●		●		●														
	HEATING ELEMENT 1500W 220-240V	65111790		●		●		●														02/13	
	HEATING ELEMENT 1500W 230V	816616		●		●		●															01/13
0002	FLANGE (5 HOLES)	65111789			●		●		●														
	FLANGE (5 HOLES)	65111789		●		●		●														02/13	
	FLANGE WITH GASKET	65103691		●		●		●															01/13
0003	ELECTRONIC THERMOSTAT	65108564		●		●		●															01/13
	ELECTRONIC THERMOSTAT	65111946		●		●		●														02/13	
	ELECTRONIC THERMOSTAT	65115258			●		●		●														
0013	WIRING (CONTROL BOARD)	65109619		●		●		●															
	WIRING (CONTROL BOARD)	65115165			●		●		●														
0014	PLASTIC COVER	65109050		●		●		●															
	PLASTIC COVER	65115325			●		●		●														
0022	SAFETY VALVE WITH LEVER (1/2" 8,5 BAR)	571730		●	●	●	●	●	●														
0023	ANODE D:25,5 L:230 M5-M8	993014-01		●	●	●	●	●	●														
0027	FLANGE BRACKET	993011		●		●		●															01/13
0030	SCREW M6X20	65151225			●		●		●														
	SCREW M6X20	65151225		●		●		●														02/13	
0031	LOCK NUT M6	994140			●		●		●														
	LOCK NUT M6	994140		●		●		●														02/13	
	NUT M8	570127		●		●		●															01/13
0033	FLANGE GASKET	65111788			●		●		●														
	FLANGE GASKET	65111788		●		●		●														02/13	
0036	CONTROL BOARD	65109048		●		●		●															
	CONTROL BOARD	65116282			●		●		●													01/17	
	CONTROL BOARD	65115324			●		●		●														12/16
0045	SCREW M6X12	993000		●	●	●	●	●	●														
0058	BAFFLE (1/2" H=72)	65113698		●	●	●	●	●	●														
0066	KEYBOARD	65109049		●	●	●	●	●	●														
0071	TERMINAL SHIELD (NEUTRAL)	993010		●		●		●															01/13
0500	**ACCESSORIES**																						
0501	HEATING ELEMENT 1500W 220-240V ANTINOISE	65114097			●		●		●														
	HEATING ELEMENT 1500W 220-240V ANTINOISE	65114097		●		●		●														02/13	

LIST OF THE ABBREVIATIONS

HW	:	Hot water.
CW	:	Cold water.
C	:	Ceramic resistance (normal heating).
Ca	:	Ceramic resistance (accelerated heating)
TP	:	Immersion heater.
1F	:	With fittings.
2F	:	Without fittings.
3F	:	With fittings and another outlet connection.
AMI	:	With mixing valve.
SMI	:	Without mixing valve.
PUISS	:	Power of th appliance.
PN	:	Appliance with normal pression.
LP	:	Appliance with low pression.
PV	:	Appliance with variable power.
PF	:	Appliance with fixed power.

IDENTIFICATION PLATE

SERIAL NUMBER

6 Characters : 03 09 08
- Year of manufacture
- Manufacturing day
- Month of manufacture

9 Characters : M 12 10 0606
- Year of manufacture
- Month of manufacture
- Sequencial number

14 Characters : SI-V-0B0 45 07 0001
- Sequencial number
- Year of manufacture : 6 ➞ 2004, 7 ➞ 2005, 8 ➞ 2006 etc ...
- Month of manufacture : 25 ➞ January, 13 ➞ February, 32 ➞ March, 35 ➞ April, 39 ➞ May, 45 ➞ June, 43 ➞ July, 29 ➞ August, 40 ➞ September, 38 ➞ October, 51 ➞ November, 12 ➞ December
- Product model

15 Characters : 02 11 00001 007843
- Year of manufacture
- Month of manufacture
- Code appareil
- Sequencial number

21 Characters : 3200050 XX 08115 0000001
- Product reference
- Sequencial number
- Year (08) / Manufacturing day (115)

22 Characters : 3200050 XX 070115 0000001
- Product reference
- Sequencial number
- Year (07) / Month (01) / Manufacturing day (15)

The indications mentionned on the prices, commercial or technical literature and the scheme are written for your guidance and are available at a given time. The CONSTRUCTOR retains the power to modify the presentation, the form, the size, the conception or the material of the products.